IFC R2.0 Object Diagram - IfcWall

DRAWN BY	REVISED
JIRI HIETANEN / BLIS - PROJECT	10.11.1999

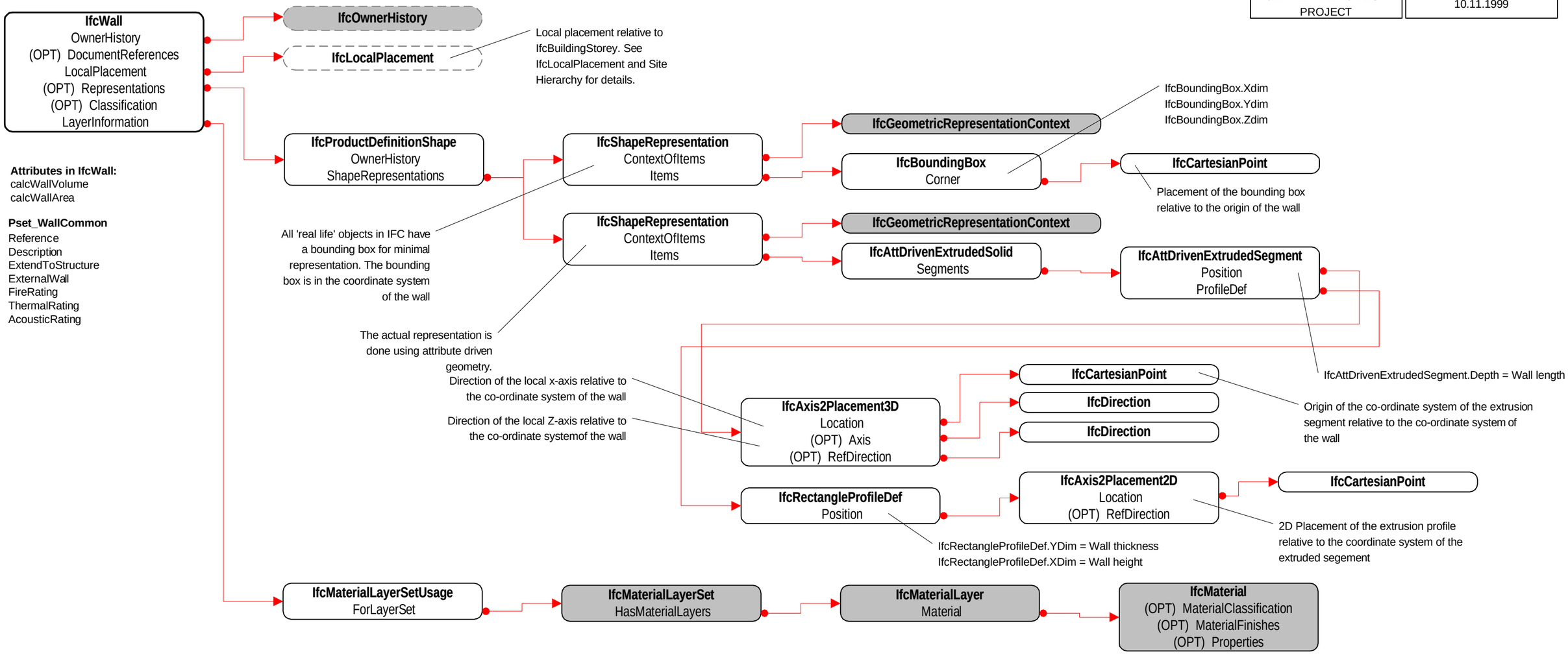

Attributes in IfcWall:
calcWallVolume
calcWallArea

Pset_WallCommon
Reference
Description
ExtendToStructure
ExternalWall
FireRating
ThermalRating
AcousticRating

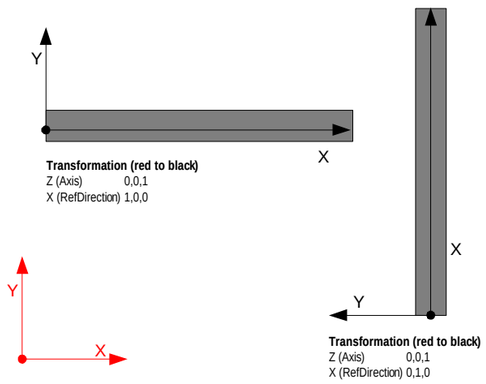

Local coordinate system for IfcBuildingStorey
Local coordinate system for IfcWall
Local coordinate system for IfcExtrudedSegment

Wall's local coordinate system

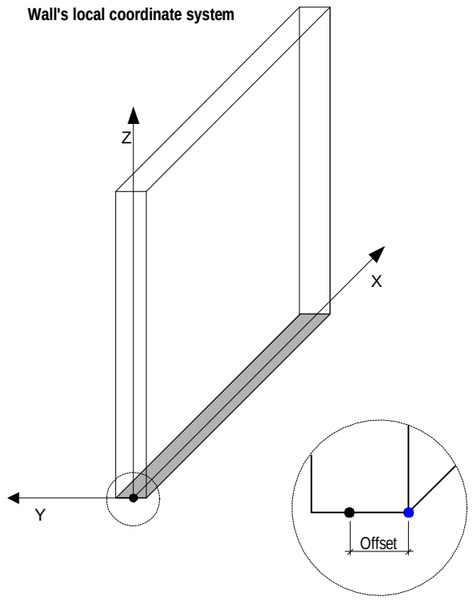

Bounding box dimensions

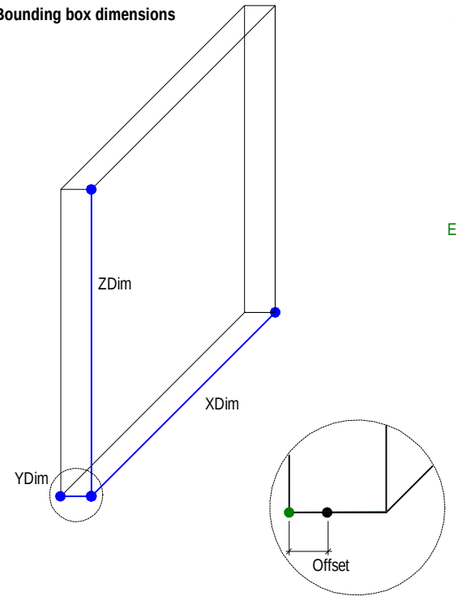
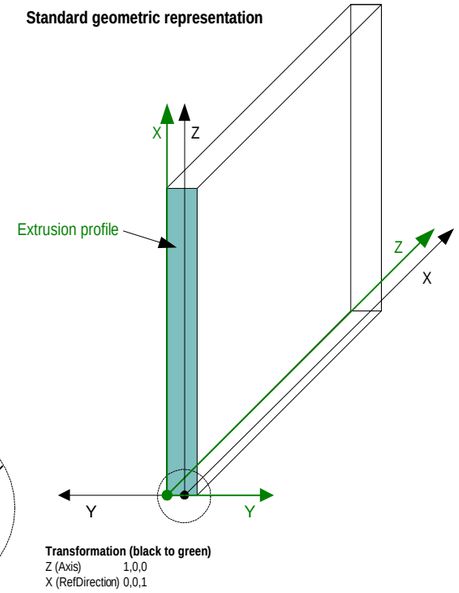
Standard geometric representation